WATER

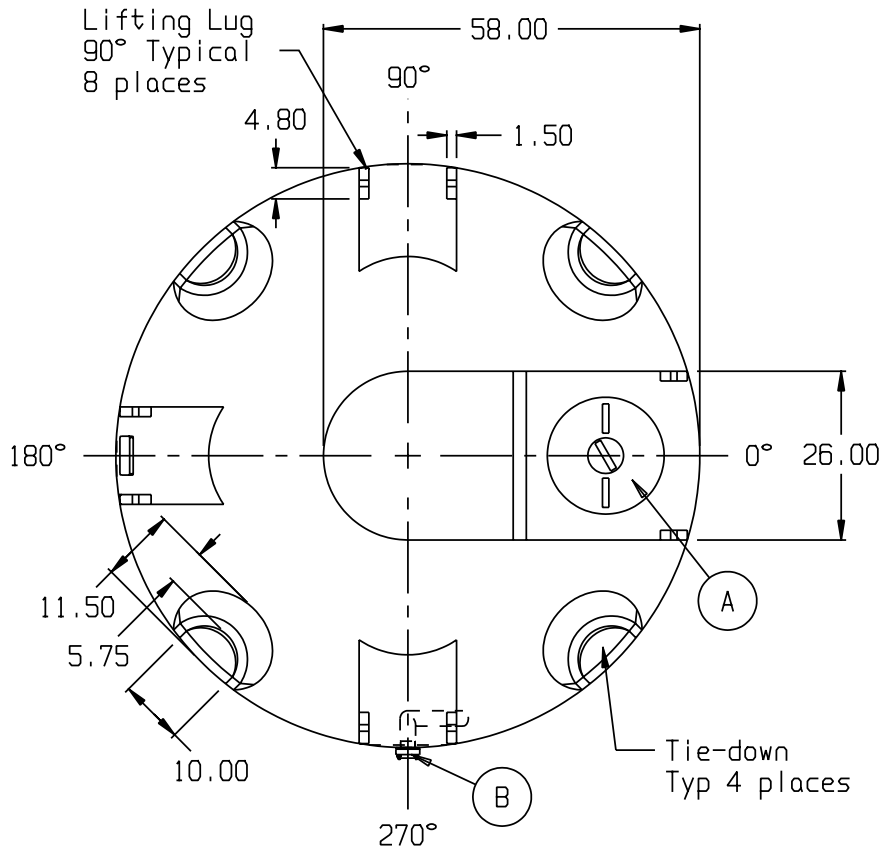

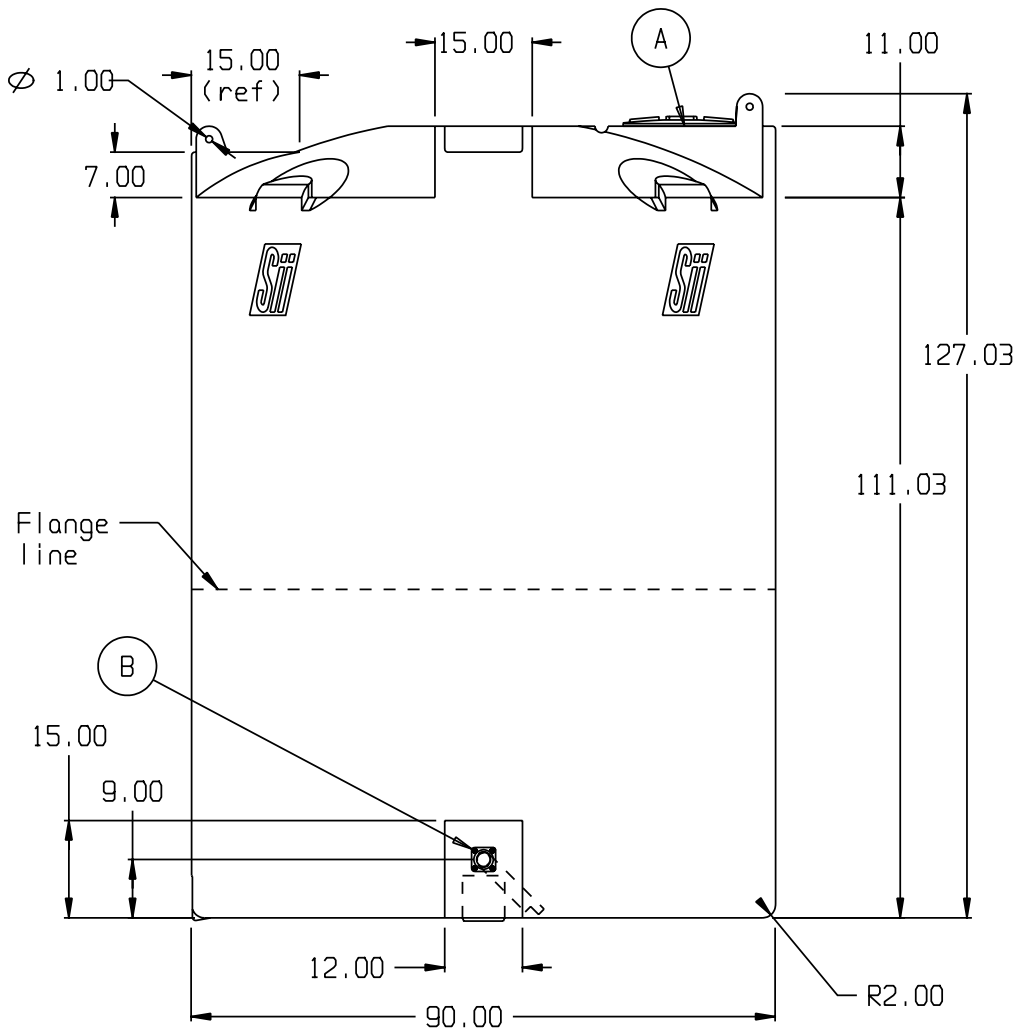

A. 18" PE THREADED-VENTED MANWAY W/15" ACCESS [P/N 34300012L]
B. 2" PP/PE BOLTED FTG SIPHON TUBE ASSY W/EPDM GASKETS & SS BOLTS [P/N 34700841L]

* BASE FITTINGS TO BE LEFT INSTALLED AT TIME OF SHIPMENT PER SII PROCEDURE
* Consult Snyder's Guidelines for Use and Installation prior to delivery.
  Available on-line at www.snydernet.com

(all dimensions in inches)

PART # TANK: 5130000W94302 (L)
HDLPE/NAT/WATER

REF#: 0000 04/17/07

3,000 GALLON FLAT BOTTOM TANK

SNYDER INDUSTRIES INC.